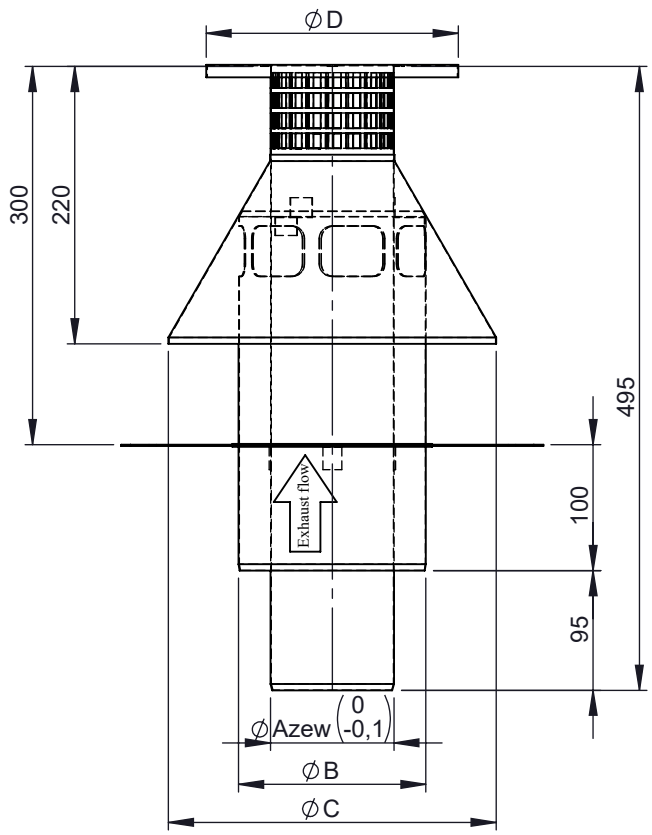

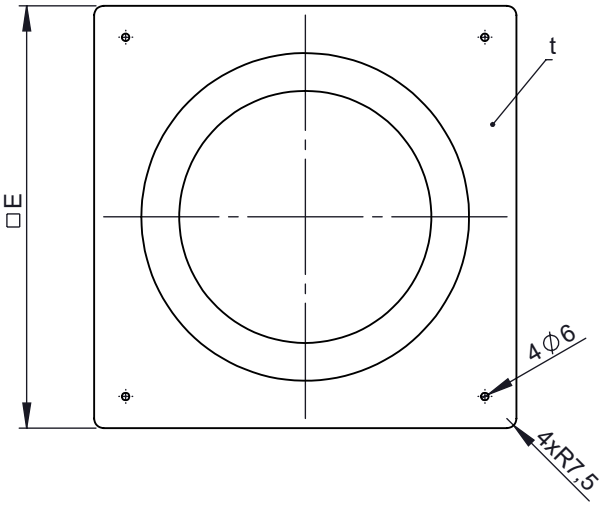

1:8(100/150)

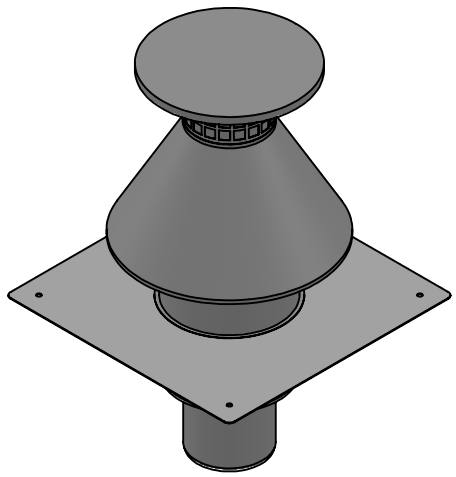

∅	100/150	130/200
A	98	128
B	150	200
C	260	290
D	200	230
E	335	400
Kg	2,6	3,3
t	1,2	

notes:
ENCD

DIN ISO 13920 Tolerances B

revisions-no.

mm/kg

	date	name
drawn by	07.12.2019	JAD
checked by	07.12.2019	SWA
approved by	07.12.2019	JWY
modified by		

jeremias CHIMNEY SYSTEMS

description: The end of the chimney

code: **H-TWIN92PE∅**

drawing-no.: **03-03-5025-000**

scale: 1:10

format: A4

sheet: 1 of 1

© jeremias GmbH. All rights reserved, also regarding any disposal, exploitation, editing, distribution, as well as in the event of applications for industrial property rights.