REV.NR.	REVISION DESCRIPTION	BY	PROJ. NR.	DATE
03	Added KOOP label 995x1195 pallet	J.Renkema	P-18251	14/10/2024
02	Added 41.008.38.29 on drawing	J.Renkema	P-18251	18/09/2024
01	OEM art nr added	J.W.Kooi	P-15013	11/06/2020
00	First Release	J.W.Kooi		06/05/2020

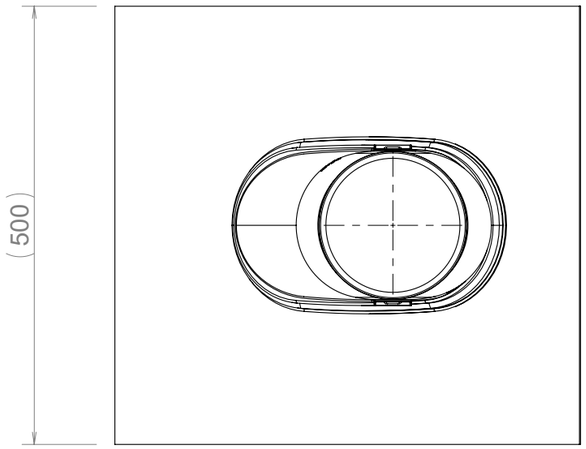

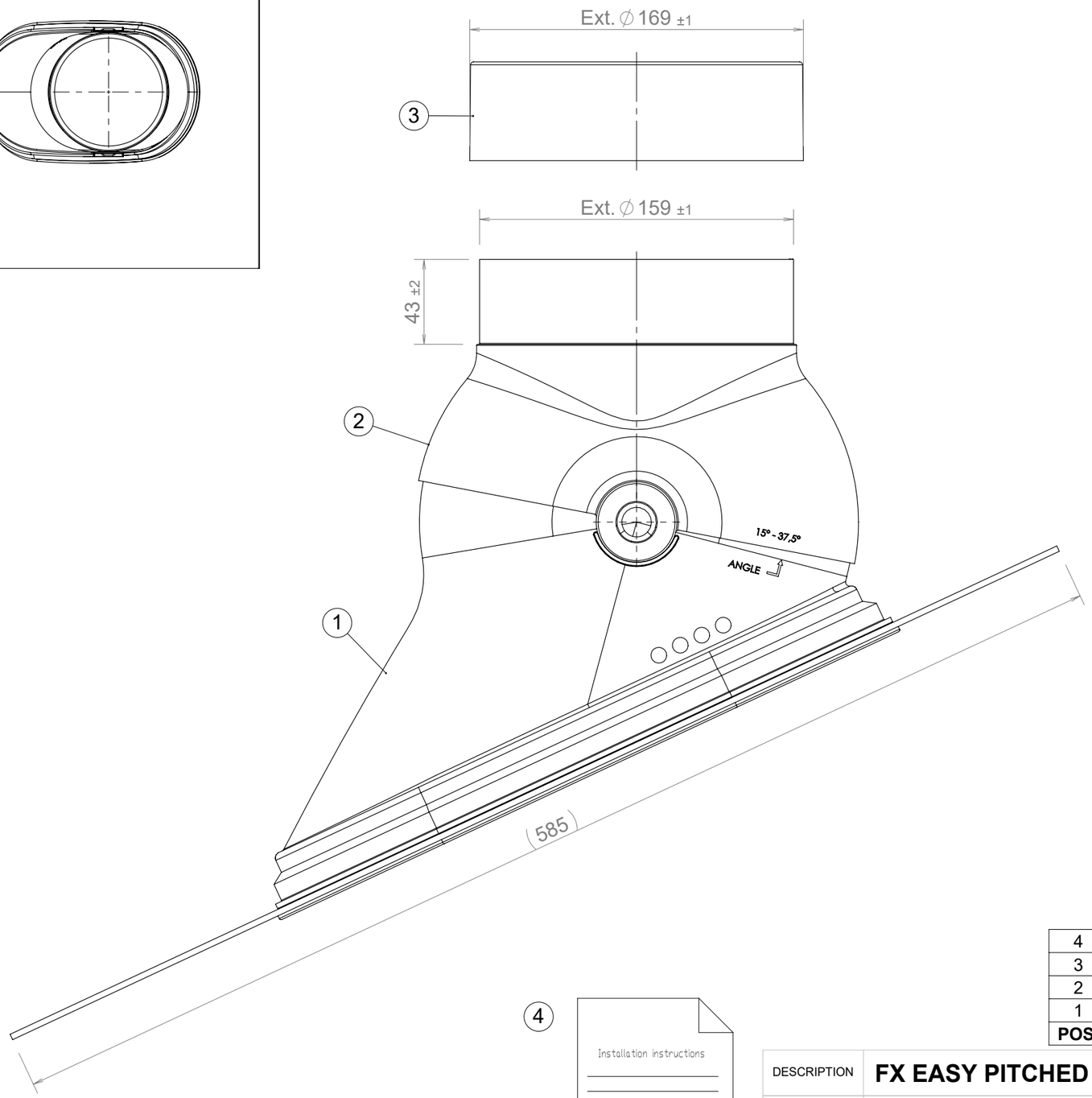

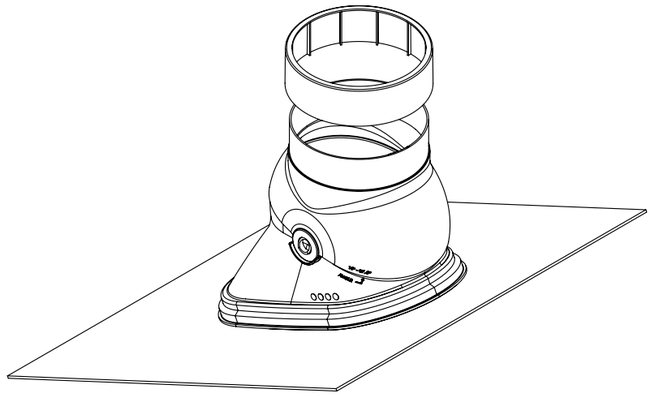

RED	41.008.38.09	KOOP LABEL	995x1195
	41.008.38.29		795x1195
	40.047.20.14	DISTRIBUTION	795x1195
BLACK	41.008.38.08	KOOP LABEL	995x1195
	41.008.77.74		795x1195
	40.047.20.13	DISTRIBUTION	795x1195
COLOR	**ART.NR.**	**TYPE**	**PALLET SIZE**

4	1	MANUAL PITCHED ROOF FLASHING FX EASY	-
3	1	SPACER RING PP 160/170	00 0704
2	1	FX EASY ADJUSTABLE COLLAR PP 160	17 00462
1	1	FX EASY PITCHED ROOF FLASHING	18 02235
POS.	**QTY.**	**DESCRIPTION**	**DRW.NR.**

4

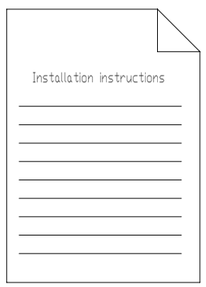

DESCRIPTION	**FX EASY PITCHED ROOF FLASHING 170**						**DEFINITIVE**
REMARK							
M&G Group	DRAWN	J.W.Kooi	Units in mm. Tolerances:(unless otherwise specified)	TOOL.NR.		MATERIAL	
	DATE	06/05/2020	Holes: ±0.1 Angles: ±1° Other: ±1	SCALE	1:2.5	SPEC. NR.	
	PROJ. NR.	P-15013		SHEETSIZE	A3	DRAW.NR.	**20 01537 03**
	CHECKED	H. Meijer		SHEET NR.	1 / 1	ART.NR.	

ALL RIGHTS RESULTING FROM THIS DESIGN, ARE RESERVED TO THE M&G GROUP